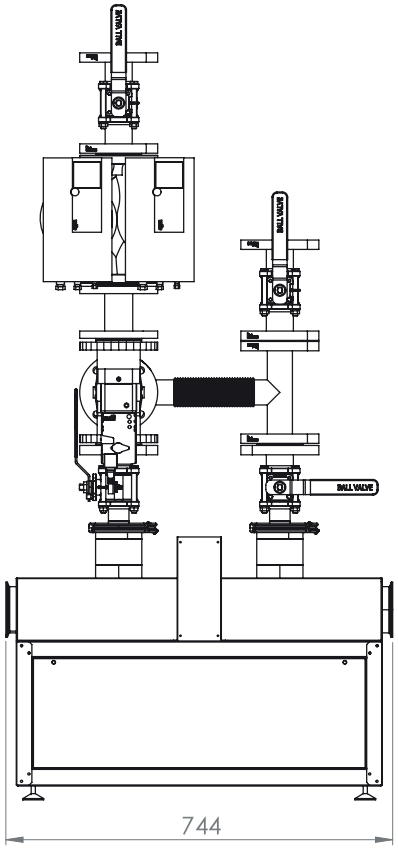

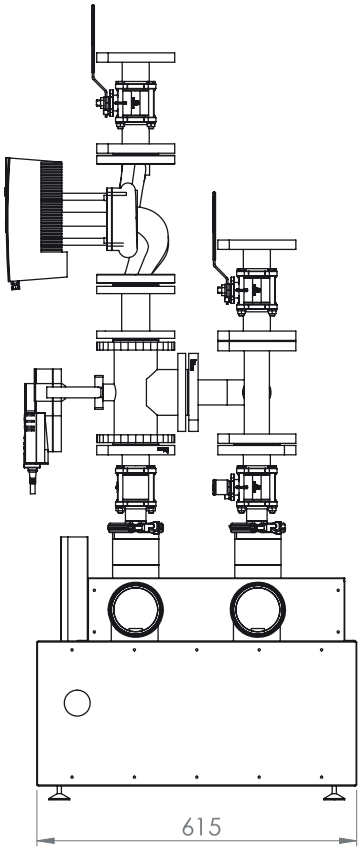

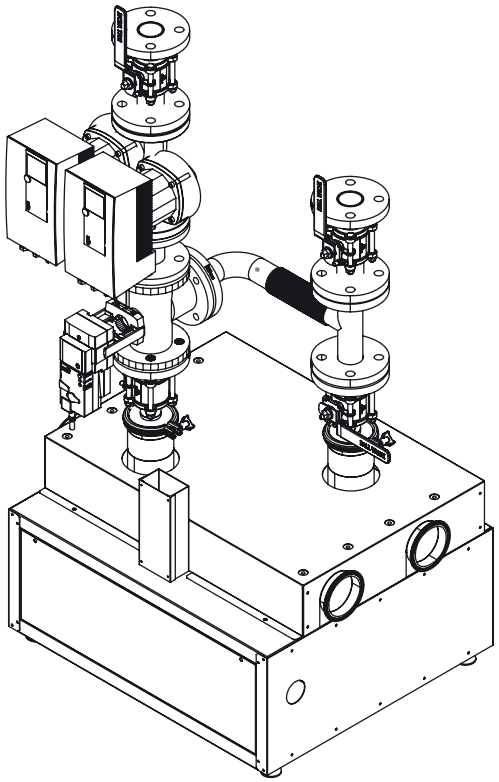

4heat°